Integrated Accident Prevention System for Alcohol Detection Using GPS and GSM Module

Abhi Jain
Department of Electronics
KJSIEIT, Mumbai, India
abhi.jain@somaiya.edu

Nameera Khan
Department of Electronics and Telecommunication
KJSIEIT, Mumbai, India
nameera.khan@somaiya.edu

Darshan Kawa
Department of Electronics and Telecommunication
KJSIEIT, Mumbai, India
darshan.kawa@somaiya.edu

Mukul Sharma
Department of Electronics and Telecommunication
KJSIEIT, Mumbai, India
mukul.s@somaiya.edu

Rupali Kadu
Department of Electronics and Telecommunication
KJSIEIT, Mumbai, India
radvaikar@somaiya.edu

V. P. Ulhas
Department of Electronics
KJSIEIT, Mumbai, India
vulhas@somaiya.edu

Abstract*—A large percentage of road accidents are caused as a result of alcohol consumption by the person driving the vehicle. Awareness of the outcomes of drunken driving and instilling a sense of responsibility does aid in preventing such accidents, but there is a vast majority who pays no heed to warnings. Our project is aimed to prevent irresponsible behavior by preventing the engine from starting if the alcohol consumption exceeds permissible limits. We have designed and tested a concept model that measures the alcohol content exhaled by the driver and this in turn, switches off the car if alcohol percentage crosses the set limits. To build our system we have used an 8051 family (89S51) microcontroller and MQ-3 alcohol sensor to detect the presence of alcohol percentage in human breath. Threshold limits are set and compared with the data received from the alcohol sensor. If the received value is beyond the set threshold limits, then appropriate action is taken to control the ignition system by electromechanical relays. GPS and GSM modules have been incorporated in the system to help locate the intoxicated person and alert the guardians of the individual, so that necessary precautions are taken for the safety of the person. In the preliminary tests conducted we were able to detect alcohol levels up to 0.05 mg/l as against the allowed limit of 0.3mg/l. For phase-1 testing of the concept model, we have considered only the working of the sensor, comparator and communication modules and not the actual placement in the car or the necessity of fans to aid the measurement process. We are sure that this model if incorporated in vehicles will provide a system which will help in controlling drunken driving.

***Index Terms*- MQ3 Sensor, GPS and GSM Systems.**

I. INTRODUCTION

In 2017, the latest year for which data is available, 4,776 people – or 13 every day – died in 14,071 road accidents due to driving under the influence of alcohol or drugs, according to data from the roads and highways ministry. And as per the world health organization, road traffic injuries caused about 1024 million deaths worldwide. The main intention of this system is to avoid the rate of accidents which normally happen due to drunk state of driver. It is not rationally possible for policemen to carry out checks in at every possible nook at all possible vehicles on the road. And the inefficiency of booking the consumers over consumption by law is really the matter of integrity of these rule. So until there is a stubborn approach from both the sides we might as well implement such systems that safeguard the law and protect the people without creating any collateral damage. This system not only detects whether the driver is intoxicated but also prevents them from driving which reduces the risks of road accidents and injuries of both pedestrians and occupants of a vehicle. The main unit of this system is the alcohol sensor. If the person inside car is intoxicated above the permitted limit, then it is detected by the sensor. Sensor gives this signal to a comparator IC. The microcontroller gets the output of the comparator as the input. Microcontroller is the heart of this project. It is the CPU of the complete circuit. The buzzer is turned on by the high pulse to the buzzer circuit by the microcontroller. At the same time the relay circuit is turned off. Due to this the ignition of the car is turned off.

II. RELATED WORK

With the ingrained technology of mobile phones and the complimentary accessories it offers us it'll be a waste if we do not incorporate its network system to connect with a vehicles Computer Area Network (CAN) to build safe utility systems. The internet connections within the phones provides us with all the possible information about the vicinity of the drive, positioning of the car and helps build a communication platform to maximize the efficiency.

In [1], As when the system detected alcohol, the ignition system was automatically turned off using PIC 16876A controller, Alcohol sensor, LCD Display and Alarm system which was also used to notify driver about the condition.

In [2], when alcohol was detected, GSM and GPS were used to find the latitude and longitude location of the intoxicated driver and the message that alcohol was detected in his breath has been informed to guardian of driver via message. Ignition system was directly switched off when alcohol is detected.

In [3], IR LED 894 produces high intensity IR rays, which means that it absorbs only high content of alcohol from air, so this assures that this mechanism works only when driver is heavily intoxicated. For lower concentration of alcohol, it was sensed accurately.

In [4], IR sensor detects obstacles in front of the sensor (vehicle), and when an obstacle is detected, the vehicle is stopped by the system. It also monitors the toxic gases such as CO2, LPG. If the content of gases in the air is higher than the permitted limit then an SMS is sent to an authorized person to notify only.

In [5], it had a real-time online prototype driver fatigue monitor remotely located charge coupled device camera equipped with Active infrared illuminators to record video and images other driver, is used in this system various visual cues that differentiate the level of fatigue of a person are extracted in real time and are combined and analyzed to conclude the alertness of the driver. These visual cues are eyelid movement, gaze movement, head movement, and facial expression. If the

driver is constantly shutting his eyelids it means eye-blink frequency is beyond the permissible value and it is in a sleepy condition, resulting in switching off the ignition system, immediately.

III. METHODOLOGY

The need of this device is that the idea of police being unavailable at every nook and corner of the streets and civilians not having rational conscience to check with their driving responsibility were at a toll. This is the solution to eliminate and 3rd party intervention and integrate the advancement of technology to maximize the pedestrian and driver safety. Under the influence, the safety of driver and possible passengers, as well as the pedestrians is at risks and in a country with 3.5 billion people along with the amount of congestion, traffic and vehicles we have on road, incorporation of such apparatus is not only a cause of safety but a cause of common sense. This system not only detects whether the driver has consumed alcohol but also prevents them from driving which reduces the risks of road accidents and injuries of both pedestrians and occupants of a vehicle. The main unit of this system is the alcohol sensor. If the person inside car has consumed alcohol then it is detected by the sensor. Sensor gives this signal to a comparator IC. The output of comparator is connected to the microcontroller. Microcontroller is the heart of this project. It is the CPU of the complete circuit. Microcontroller gives high pulse to the buzzer circuit and the buzzer is turned on. At the same time a relay is turned off. Due to this the ignition of the car is deactivated. In 2017, the latest year for which data is available, 4,776 people – or 13 every day – died in 14,071 road accidents due to driving under the influence of alcohol or drugs, according to data from the roads and highways ministry. And as per the world health organization, road traffic injuries caused about 1024 million deaths worldwide. The main intention of this system is to avoid the rate of accidents which normally happen due to drunk state of driver. It is not rationally possible for policemen to carry out checks in at every possible nook at all possible vehicles on the road. And the inefficiency of booking the consumers over consumption by law is really the matter of integrity of these rule. So until there is a better approach from both the sides we might as well implement such systems that safeguard the law and protect the people without causing any collateral damage.

Drink and Drive Prevention System consists of two models the Micro controller model and GPS and GSM model. The micro controller model consists of Alcohol detection sensor. The sensor measure the amount of alcohol present in the surrounding environment. The methodology uses carbon dioxide as a tracer gas detected by sensor technology based on infrared spectroscopy. Analog to digital convertor or ADC is used as a signal conditioner, which is given as an input to the micro controller. Most of the information carrying signals such as voltage, current, temperature, pressure and time are available in analog form. However, for processing, transmission and storage purpose, it is often more convenient to express such signals in digital form. The Micro controller 8051 is the major part of the system. It maintains the temperature, humidity and light intensity to the desired value. The 8051 has one serial port that receives and transmits data. Transmission and reception can take place simultaneously. Microcontroller used here is the AT89S51.The Data which we got is further calculated and is displayed on a LCD Screen which is used. The screen display is of 16x2 alphanumeric display screen, which means we can display maximum 2lines of 16 characters each. There is a relay for controller is used in order to correct the errors during the calculation or the processing of data in the controller. The power supply gives +5v and +12v supply to the circuit. The Transformer is the main component of power supply. The power supply consists of four stages namely transformer, rectifier, filter, and regulator. Transformer is a step-down transformer taking input of 230v AC and giving output of 15v at the secondary. This 15v AC is rectified by bridge rectifier consisting of four diodes, which converts the AC wave into fully rectified wave. The next stage is the filter stage consisting of capacitor, which converts the fully rectified wave into the DC wave with some ripple. Last stage is the regulator stage. Regulator removes the entire ripple and gives pure DC. The LED is connected to indicate that power supply is ON. Thus the following way the alcohol present inside the vehicle is detected.

Global System for Mobile Communication (GSM) is the world's most famous mobile platform. GSM unit is interfaced through a serial communication link with microcontroller 89S51. RS 232 link is used when whichever data is to be sent to the GSM unit. TTL voltage level is translated to RS-232 compatible level by the level translator. It is realized with MAX 232. When and where there is an unobstructed line of sight to four or more GPS satellites, the Global Positioning System (GPS), that is, a space- based global navigation satellite system (GNSS), gives reliable location and time information in all weather and at all times and anywhere on or near the Earth. GPS satellites high above the Earth, use a GPS receiver to calculate its position by precisely timing the signals sent by it. The time the message is transmitted, as well as precise orbital information (the ephemeris) of the general system health and rough orbits of all GPS satellites (the almanac) is transmitted by a satellite continually in the form of messages that includes all of these. The distance to each satellite is calculated by the receiver that uses the messages it receives to determine the transit time of each message. The locations of the satellites along with the distances are used with the help of trilateration, depending on which algorithm is used, to calculate the location of the receiver. This position is then displayed, perhaps with a moving map display or latitude and longitude; including elevation information. Many position changes can be used to calculate derived information such as direction and speed, calculated from position changes using GPS module. Thus In vehicle tracking both the GPS and GSM module is intervened in a vehicle. Thus, the following actions if the vehicle is displayed to either passenger sitting behind of car and also to the nearby police station if the driver is found to be drunk and was detected.

IV. PROPOSED SYSTEM

The existing system in the market for alcohol detection uses MQ3 Sensor and is a portable device, due to which it becomes

difficult to prevent an accident and locate an intoxicated individual.

Our proposed system is a hardware system that is to be fixed in the car itself that in turn reduces the number of accidents due to intoxication.

The proposed model of this system can be divided into two parts:

i. Alcohol Detection Module.

- It consists of MQ3 (Alcohol Sensor), ATD Converter, Microcontroller 8051.

ii. GPS & GSM Modules along with Relay Module.

- This is an additional feature of the system that helps switch off the ignition of the system and send the cars coordinates to their respective guardians.

The proposed block model for the system is shown in Fig.1

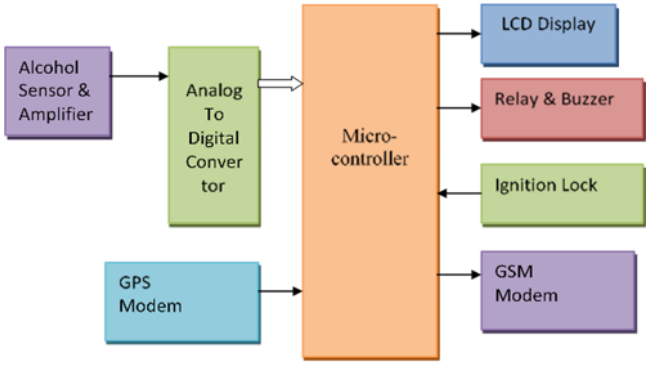

Fig.1 System Block Diagram

V. RESULT

The testing produced an evaluation that not only subverts the problem but also acts as a gateway for a wider scope of accident prevention system. The accuracy of the system ranged between 75-85% and error quotient, which after repetitive tests, showed minor problems in detection if the driver is under the influence i.e., the sensor is efficient and precise enough to detect the presence of alcohol in the vehicle cabin by up to 97% but at times failed to understand if the alcohol detected is by the driver or the passengers of the car.

For those who wish to check the working of the model, a small video is uploaded on Google drive. The link below shows a small video of our prototype on google drive https://drive.google.com/file/d/1kH1eryX9GUGME0g74Vw5PLezRMwfPBBc/view?usp=sharing.

The direct measure of alcohol content kept in a tiny container in open air is used to test the efficacy of the sensor system. The system used to detect alcohol is shown below in Fig.2. and Table 1 below shows concentrations of alcohol for which the system was able to work efficiently. The testing produced results that showed the minimum range between which alcohol content was detected by the system. This is well within the permissible ranges allowed by the Government of India (0.3 mg/l)

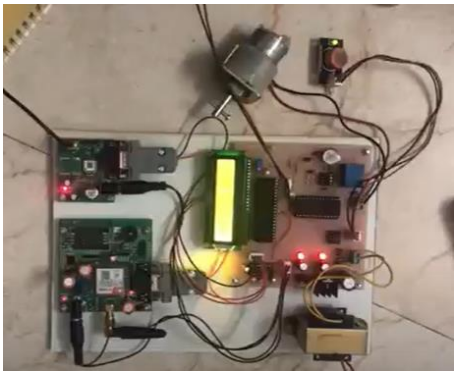

Fig.2 System used to detect alcohol

Alcohol Concentration (mg/L)	Detected/ Not Detected
0.35	Detected
0.26	Detected
0.17	Detected
0.15	Detected
0.09	Detected
0.07	Detected
0.05	Detected
0.04	Not Detected
0.03	Not Detected

Table 1: Results obtained

VI. CONCLUSION

The sensor system detects the inebriated state of the driver and takes the appropriate action according to the levels of alcohol detected. Our system's primary goal is the safety of the driver and passengers. We were able to measure the sensor output for different alcohol levels. The minimum level we were able to detect was 0.05mg/l as shown in the table. In this system, sensor works efficiently in recognizing the alcohol level due to its high sensitivity towards alcohol. The system works effectively to make sure of the safety of vehicle. The alcohol concentration for driving that has been allowed by the Government of India is 30 mg per 100 ml (about 0.3mg/L). Our system can, not only check for the values below the allowance limit i.e.; for very less concentrations of alcohol. Though, the efficiency of the system can still be increased further by using highly accurate sensors that can sense alcohol concentrations below the MQ3 sensors limit. Our Phase-1 model satisfies all the conditions that were expected from the system. For Phase-II, our plan is to incorporate the system in the car and also include methods to check the condition of the driver and ways to increase the accuracy of the system by reducing the error quotient of the system.

REFERENCES

[1] Vaishnavi.M , Umadevi.V , Vinothini.M , Bhaskar Rao .Y , Pavithra.S , "Intelligent alcohol detection system for car'', International Journal of Scientific & Engineering Research, Volume 5, Issue 11, November-2014 598 ISSN 2229-5518

[2] Dada Emmanuel Gbenga, Hamit Isseini Hamed, Adebimpe Adekunle Lateef, Ajibuwa Emmanuel Opeyemi, "Alcohol Detection of Drunk Drivers with Automatic Car Engine Locking System'', Nova Journal of Engineering and Applied Sciences DOI:10.20286 Vol.6(1)2017:1-15

[3]Dimple U. Mendhe, Pallavi R. Mishra, Monika R. Taywade, Rajani G. Musale, Komal Ramteke, "Alcohol Detection with Vehicle Controlling",International Journal of Advanced Research in Computer and Communication Engineering ISO 3297:2007 Certified, Vol. 6, Issue 3, March 2017

[4]Mrs.K. Nirosha, C. Priyanka, K.Anil Kishore, “Alcohol detection in vehicles”,International Research Journal of Engineering and Technology (IRJET) e-ISSN: 2395 -0056 Volume: 04 Issue: 04 | Apr -2017

[5] Pranjali Ingalepatil, Priyanka Barhate, Bhagyashri Nemade, Vijay D. Chaudhari, “Alcohol Detection System in Vehicle’’, International Research Journal of Engineering and Technology (IRJET) e-ISSN: 2395 - 0056 Volume: 04 Issue: 06 | June -2017.

[6] Pranjali Ingalepati, Priyanka Barhate, Bhagyashree Nemade, Vijay D. Chaudhari,” Alcohol Detection System in Vehicle”,International Research Journal of Engineering and Technology (IRJET) e-ISSN: 2395 - 0056 Volume: 04 Issue: 06 | June-2017.

[7] Rajesh Kumar Jakkar, Roop Pahuja , Raj Kumar Saini, Bhagirath Sahu, Natwar, “Drunk-Driver Detection and Alert System (DDDAS) for Smart Vehicles’’, American Journal of Traffic and 10.11648/j.ajtte.20170204.12.

[8] Namita Shinde,Amresh Giri, Swati Rima, Parul Singh, “Alcohol detection and vehicle engine locking system’’, International Journal of Industrial Electronics and Electrical Engineering, ISSN(p): 2347- 6982, ISSN(e): 2349-204X Volume-6, Issue-3, Mar.- 2018.

[9]Supraja, Bhanu Sri, Mary Posonia, “Drunk and Drive detection using IOT’’, International Journal of Pure and Applied Mathematics Volume 118 No. 20 2018, 4303-4307 ISSN: 1314-3395.

[10] Prof. Dr. D.G.Jha, 2 Swapnil Buva, “Alcohol Detection in Real-Time To Prevent Drunken Driving’’, IOSR Journal of Computer Engineering (IOSR-CE) eISSN: 2278-0661,p-ISSN: 2278-8727 PP 66-71.